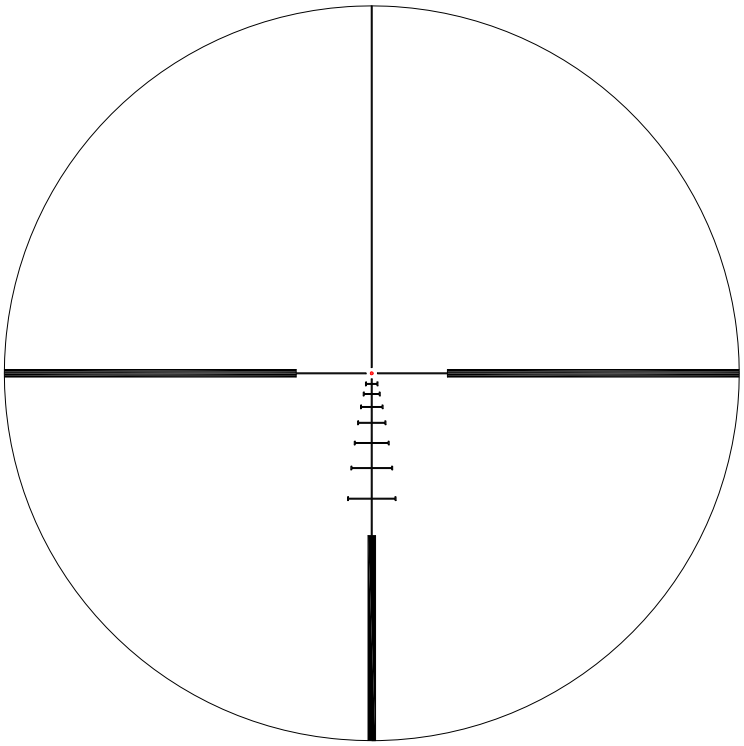

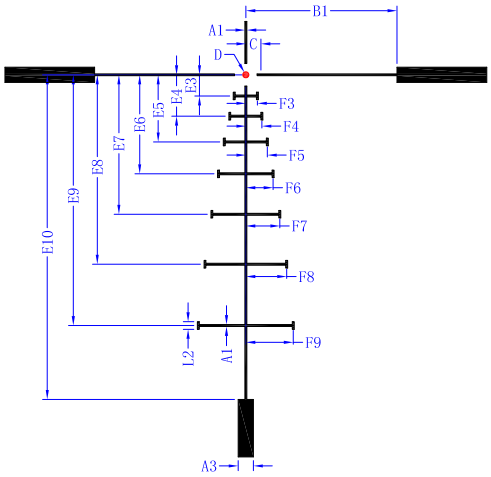

ZERO AT 100yds / 5mph WIND

Reticle	Dimensions(moa)										
.223 RD	A1	A3	B1	C	D	E3	E4	E5	E6	E7	E8
Optika6 1-6x24 RD SFP (6×)											
Optika6 2.5-15x44 RD SFP (6×)											
Optika6 3-18x50 RD SFP (6×)	0.25	2	20	1.5	0.8	2.8	5.47	8.88	13.1	18.44	25.05
Optika6 4.5-27x50 RD SFP (6×)											
Optika6 1-6x24 RD FFP	0.34	2.5		2.8	1.2						
Optika6 3-18x50 RD FFP	0.25	2		2	0.8						
Optika6 4.5-27x50 RD FFP	0.18	1.5		1.5	0.5						

Reticle	Dimensions(moa)									
.223 RD	E9	E10	F3	F4	F5	F6	F7	F8	F9	L2
Optika6 1-6x24 RD SFP (6×)										
Optika6 2.5-15x44 RD SFP (6×)										
Optika6 3-18x50 RD SFP (6×)	33.16	42.93	1.53	2.12	2.85	3.61	4.49	5.4	6.28	1
Optika6 4.5-27x50 RD SFP (6×)										
Optika6 1-6x24 RD FFP										
Optika6 3-18x50 RD FFP										
Optika6 4.5-27x50 RD FFP										

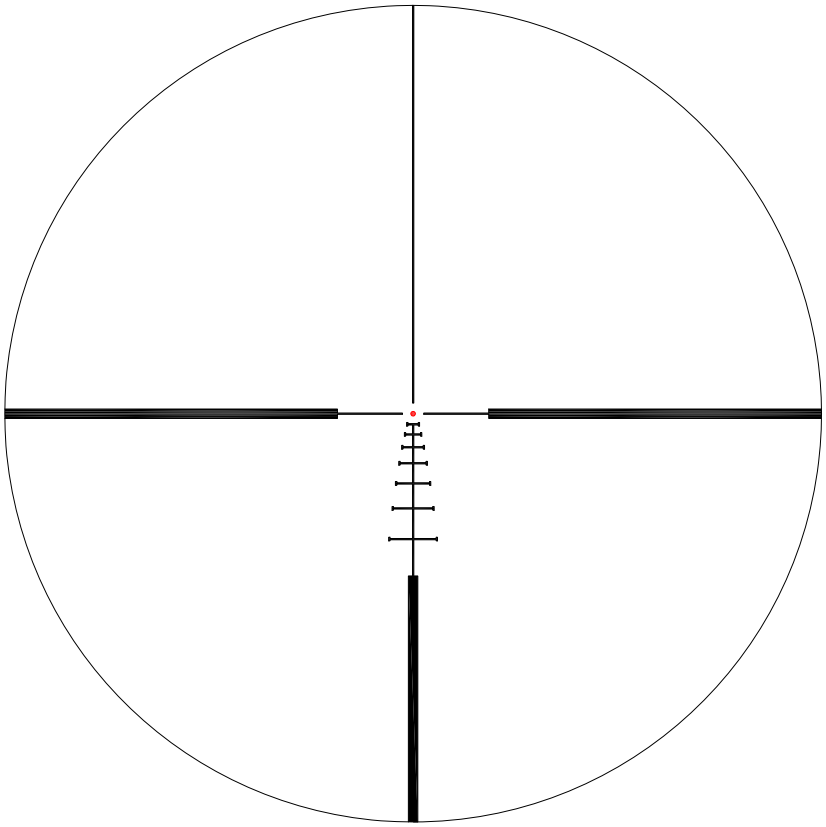

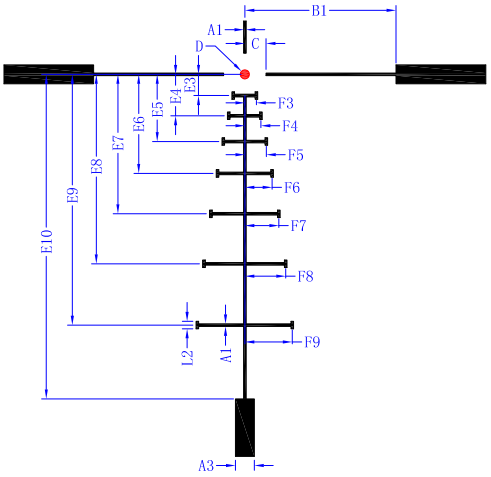

1-6x24 .223 RD FFP